Service Instructions

for the

thermatur 200

Contents

1. Construction

The short-wave therapy unit "thermatur 200" is a portable stand-type unit on guide rollers. As self-supporting sub-assembly the frame contains the base group on the one hand and the sub-assemblies RF part, control desk, rear and front walls on the other one.

1.1. Casing

Fig. 1 shows the exploded view of the unit. The face (1) can be taken off in front direction after loosening screws (7) and drawing off the earthing contact (12). Then, the rear wall (2) can be taken off after removing the screws, parts (10) by means of the patient socket wrench (cf. Spare Parts List) and drawing off the earthing contact (12). The mains input component A001 containing the fuse elements F001/F002 is screwed in the rear wall. For most service work it is only necessary to remove the face of the unit.

1.2. Base group

The elements of this sub-assembly are mounted on the bottom part of the frame. They include mains transformer (T001), power supply module (A100), mains filter (A002), power relay (K001) and earthing-conductor contact element (X001).

1.3. RF part

The RF part is subdivided into the following sub-assemblies:

A200 - power generator
A500 - harmonic filter
A300 - output circuit.

The RF part is accommodated in an electromagnetically screened casing. After removing cover (5) (Fig. 1) the sub-assemblies A200 (22) and A500 (16) as well as the components C001 and R002 (18), V001 and R001 (19), G001 (21) and thermistor R003 (24) (all in Fig. 2) are accessible. The sub-assembly A500 is electrically screened by cover (17) (Fig. 2). The external electric supply lines of the front compartment are connected to the lead-through filters or capacitors C002 to C007 and C016 to C019. The multipoint connector X002 (20) (Fig. 2), where the diode V002 is soldered at, is mounted below the front compartment. The fan motor M001 is accommodated on the cover plate of the RF part (Fig. 2). The rear compartment is closed by cover (11) (Fig. 1) and contains the sub-assembly A300 as well as the components X003 to X005, R004 and C009 to C015.

1.4. Control desk

The control desk (3) (Fig. 1) with the front foil (14) (Fig. 1) stuck up forms the upper part of the unit. The control computer PCB (printed circuit board) (A400) with its control and display components is mounted on spacers in the desk below the front foil. Both switches (S001) and S002) are arranged beneath that. The vertical adjustment of the control desk in the completely mounted unit can be performed after removing the caps (15) (Fig. 1) in the face of the casing.

1.5. Cable connections

The unit is to be connected to the mains via a removable, shielded power cord provided with a non-fused earthing contact. It is to be observed that the power cord, drawer of the combined element (A001) and the fuse elements in the drawer are suited for the corresponding voltage version of the unit (115 V or 230 V).

There are two cable harnesses in the unit. The primary cable harness is arranged at the left side of the mains connector (A001) and runs up to the mains switch (S001). The secondary one is at the right side and connects the sub-assembly A100, RF part and control computer A400 as the main parts. The casing parts control desk, face and rear walls are connected to the central earthing point X001 via earthing plug connections.

2. Electrical and functional descriptions

2.1. Description of the sub-assemblies

2.1.1. Power supply - sub-assembly A100

The A100 sub-assembly is a mains-frequency clocked switching power supply generating the V1 (+5 V), V2 (+15 V) and V3 (-15 V) supply voltages at output CON2. Through plug connector CON1 (terminals 1 and 3) the mains power is fed in; this connector is designed for 230 V as well as 115 V. It is a wide range input (90VAC to 265VAC) so that is not nessesary to switch over the sub-assemly for different mains voltages. The fine adjustment of the V2 supply voltage is to be performed by means of control P1.

2.1.2. Power generator - sub-assembly A200

This module can be subdivided into three main sections. The first one includes the crystal-controlled generation, amplification and filtration of the 27.12-MHz high-frequency power. The second one of this sub-assembly includes the measurement and control circuits which enable an exact adjustment of the output power. And the third section contains the control circuit of the operating voltage of the amplifier.

Any repair work of this sub-assembly shall only be performed by the manufacturer. That's why, this description is restricted mainly to the terminals. The supply power of the sub-assembly is fed via the plug connectors X206 (+15 V), X209 (-15 V) and X210 (earth). Additional supply terminals are X201 to X205 which are used for the regulation of the operating voltage of the output amplifier. There importance as well as that of the terminals X207, X208, X211 to X213 is described in detail in clause 2.2. The power is coupled out at the coaxial connector X222. This A200 sub-assembly is delivered in the tested and tuned condition. Only the fine adjustment of the output power is to be performed by means of R202 and adjustment of sero point at X216 by means of R205.

2.1.3. Harmonic filter - sub-assembly A500

A harmonic filter, that additionally attenuates the RF interference spectrum in the frequency range between 54 MHz and 100 MHz, is directly connected to the RF output of the power generator. It's adjustment is necessary to ensure being below the interference levels given by law. In case of erroneous operation this sub-assembly has to be replaced in any case. Avoid any dismounting of the air-core chokes L501/L502. The cover on this sub-assembly is absolutely necessary to maintain the low RF interference values required by law.

2.1.4. Output circuit - sub-assembly A300

The output circuit is provided to match the application part, which is connected either to the coaxial output X003 or to the balanced output X004/X005, as exactly as possible to the generator. The matching is performed by means of the adjustable capacitor C302 driven by stepping motor M301, which is a component of a serial circuit in connection with the coils L302 and L303. The RF power is fed through connection X301. When using the capacitor-field electrodes (X004/X005) the contacts of relay K301 have the positions shown in the Overall

Wiring Diagram. The RF power flows via the capacitor chain C303 to C305 to the balance-to-unbalance transformer L301/L302/L303 whose secondary windings are parts of the serial circuit mentioned above.

When using the coil-field electrodes (X003) the relay is in the opposite switch position. Then, the signals flow from K301.1 via C302.1, C302.2, L302, C301 to the output socket X003 where the frequency-dependent components also form a serial circuit.

The chokes L304 and L305, the capacitors C306 to C308, C311 to C315 and the lead-through filters C009 to C015 ensure the decoupling of the control signals from the RF part. For the relay coil the diode V302 operates as free-wheeling diode, and transistor V301, in its common-base circuit, controls K301. Stepping motor and relay are triggered by control computer A400. R307 is the basic load for the control signal at X306.

2.1.5. Control computer - sub-assembly A400

Sub-assembly A400 is the central unit which realizes all signal and operation functions as well as measurement and control operations. The micro-controller 87C196KB, which reduces the computer hardware to a minimum and, thus, is a very service-friendly solution, is the basis of this control computer.

The integrated circuit 87C196KB contains clock generator, CPU, program memory, A/D converter, counter/timer and several different input and output ports. For clock generation (8 MHz) only the external components Q401, C406 and C406 are to be connected. After switching-on the watch-dog circuit D401 generates a reset signal and initiates a defined start of the internal program run of the processor. But the generation of the reset signal is also possible by means of key S409. The supply voltages +5 V, +15 V and -15 V are applied to the sub-assembly via X403. Mode of operation, applicator type and treatment time are adjusted by means of the key matrix S401 to S408 and S410 to S412. They are triggered by the output ports P1.4 to P1.7 and evaluated by the input ports P2.1 to P2.3 which are loaded by the pull-up resistors R449 to R451. The output power is adjusted by means of pulse generator D408 feeding the two direction-of-rotation dependent signals (2) and (4) to the processor via NMI and P0.5. Processor output P2.5/PWM delivers a pulse-duration modulated signal that is converted to a DC voltage by the two operational amplifier networks N401A/N401B and used to control the power output of generator A200. The connection C402-to-D402 (P0.6) is used to monitor the D/A conversion. In the pulsed modes of operation the DC voltage is keyed via processor output pin P4.7/AD15 and transistor T401. The generator control voltage, the level of which is also monitored by processor (P0.6), applies at plug connector X401.5. The bar indicator VD401 consists of ten LEDs and signals the degree of matching between patient circuit and generator output. The individual LEDs VD402 to VD410 have the following meaning:

VD402 signals the adjustment of the "Triplode" applicator.

VD403 signals the adjustment of the "Medium coil-field electrode" applicator.

VD404 signals the adjustment of the "Small coil-field electrode" applicator.

VD405 signals the adjustment of the "Large capacitor-field electrode" applicator.

VD406 signals the adjustment of the "Medium capacitor-field electrode" applicator.

VD407 signals the adjustment of the "Small capacitor-field electrode" applicator.

VD408 signals the adjustment of the "350-Hz" pulsed mode of operation.

VD409 signals the adjustment of the "70-Hz" pulsed mode of operation.

VD410 signals the adjustment of the "continuous-wave" (CW) mode of operation

The above information applies in multiplex form at the processor output pins P3.0/AD0 to P3.7/AD7 and is stored by the integrated circuits D404 to D406. This includes also the triggering of the piezo-signal transmitter B401 and signal D406(Q6) which is driven by D403 and, via its open-collector output, releases the switching-over of relay K301 via X402.5. Signal D406(Q5) is not used. The 7-segment indicators VD411 to VD415 are also triggered in the multiplex mode of operation. Data sources are the processor output pins P4.0/AD8 to P4.3/AD11 the hexadecimal data of which are decoded by integrated circuit D407. Amplified by T402 to T406 the multiplex signals P2.0/TXT and P1.0 to P1.3 are fed to the anodes of the indicator elements and show the following information:

VD411 shows the ten's place of the minutes of treatment time.

VD412 shows the one's place of the minutes of treatment time.

VD413 shows the hundred's place of the unit's output power.

VD414 shows the ten's place of the unit's output power.

VD415 shows the one's place of the unit's output power.

Integrated circuit D403 is used as driver circuit. In addition to the above signal it amplifies the motor control signals (M301) which are generated at D402 (P2.6 and P2.7). Both signals are directly amplified, inverted and transmitted to the plug connector X402 (pins 1 to 4). At each of it's outputs, D403 has a free-wheeling diode and the other-end connectors "D" of which are connected to the +15-V supply voltage.

The switch condition of the emergency-off switch connected at plug connector X403.6 is evaluated by transistor T408 and terminal D402 (P2.4/T2RST) of the processor which signals this information for further processing. An emergency-off actuation additionally releases a switching operation of the transistors T409 and T407 where the collector of the last actuates the power relay K001 via X403.5.

Micro-controller 87C196KB has eight analogous inputs (P0.0 to P0.7). The directional coupler signals U_S+U_D and U_S-U_D, whose amounts are used for tuning the output circuit by means of M301, are connected to P0.0 and P0.1. At X401.3 there applies a signal that is proportional to the output power. Via the resistor network R465/R466 this arrives at pin P0.2 of the processor. R465 is provided for tuning the output power of the unit.

This circuit realizes two additional monitoring functions. A thermistor (R003) is provided at the heat sink of sub-assembly A200 for checking the temperature of this sub-assembly. It is connected to X401.4. R439 is a component of a voltage divider whose output value is measured at pin P0.3. The voltage across the power stage of sub-assembly A200 is monitored through the voltage divider R440/R441 whose feeding point is connected to X401.8.

The diodes V401 to V405 and capacitors C407 to C424 meet protective and RF interference protection functions.

2.2. Description of the Overall Wiring Diagram

The power supply of the **thermatur 200** is realized by the mains transformer T001 and the A100 sub-assembly that is connected with the 115-V or 230-V, 50 HZ/60 Hz, mains via mains input A001, RF interference protection filter A002 and mains switch S001. The unit is adjusted to the corresponding mains voltage by the manufacturer. The 45-V output voltage of T001 is required for generating the supply voltage of the power stage of sub-assembly A200. The voltage is rectified by bridge G001 the positive pole of which is connected to X205. In the other DC path there is arranged thyristor V001 which is triggered by the operating voltage control circuit of sub-assembly A200 and charges capacitor C001 in dependence on the generator output power. This is synchronously performed to the mains frequency, where the 26-V voltage of T001

between X205 and X203 is used. The regulated DC voltage between X205 and X201 is superimposed by a serrated AC voltage of different amplitude and frequency. C001 is discharged via the R002 resistor. The supply voltage of the control circuit applies between X204 and X205.

The two DC voltages of +15 V (X206) and -15 V (X209), with their reference point X210, are required for the analogous circuits of sub-assembly A200 and pre-amplifier. They are prepared in the power supply module A100 (SK6.3 and SK6.4). The relay contact K001.1 which interrupts the supply of the pre-amplifier under emergency-off condition is connected in series with the positive signal path. The DC fan motor M001 is supplied with the negative voltage after a voltage reduction by diode V002. Capacitors and Filters C002 to C019 are applied for certain measures of the RF interference suppression.

A400 is fed via plug connector CON2 of sub-assembly A100. At CON2/5 the emergency-off switch is connected to +5 V and the power relay K001 to -15 V (CON2/1). When the -15-V circuit is interrupted the break contact opens and switches off the power of generator A200. The common reference point CON2/3 lies on the casing potential.

The remaining part of the circuit was already described in the above description of the sub-assembly. Finally, it is to be mentioned that with any service work particularly care is to be taken to the earthing connections given in the wiring diagram because they are decisive for maintaining the low RF interference suppression level.

3. Test

3.1. Testing devices and measuring instruments

- High-voltage testing equipment
- Leakage current measuring device
- Earthing-conductor testing device
- Insulation resistance measuring instrument
- Power meter URV 55
- Thermal Power Sensor NRV Z51
- Precision resistor 50 Ω, 200W, attenuation output 40dB
- Adjustable isolating transformer
- Digital multimeter FLUKE 87 /3 True RMS
- Moving-iron instrument (0.5 A, 10 A)
- Oscilloscope (50 MHz)
- Frequency meter (50 MHz)
- Stop-watch
- Resistance phantom circuit
- Compact lamp phantom LPH
- Diverse measuring lines and coaxial transitions
- Timer

3.2. Pre-test

- Remove the face of the unit.
- Remove the cover of the RF sub-assembly.

3.2.1. Check of earthing connections

- Visual inspection of the X001 connections to the unit's rear wall and control desk.
- Visual inspection of screw connections at the base and RF sub-assemblies.

3.2.2. Check of the fuse elements

- F001/F002 (combined element A001) - according to the voltage version:
  230-V version: SP 6.3 A, fast (ceramic pipe, dim. 5 mm x 20 mm)
  115-V version: FST 6.26 A, slow (glass pipe, dim. 6.3 mm x 32 mm).
- F003 (mains transformer T001) - FST100 mA, slow (glass pipe, dim. 5 mm x 20 mm).
- F1 (power supply A100) - FST 2 A, slow (glass pipe, dim. 5 mm x 20 mm).

3.2.3. High-voltage test

- Connect the power cord between unit socket and high-voltage testing equipment.
- Set mains switch S001 to position "I".
- For a short time apply the test voltage of 1.5 kV, 50 Hz, between earthing conductor and mains voltage connector of the unit to be tested.

3.3. Operation test

- Set mains switch S001 to position "0".
- Connect the unit to the rated mains voltage.
- Mains-voltage indicator in S001 shall not be lit.

3.3.1. Stand-by operation

- Switch on the unit by means of S001.
- All indicators will lit up, power indicator show the actual software version a short time
- Mains-voltage indicator in S001 shall be lit green (only with the 230-V version).
- Treatment time "MINUTES" (VD411/412) indicates "0".
- Power indicator "WATTS" (VD413 to 415) indicates "0".
- All other indicators are inactive.

3.3.2. Modes of operation

3.3.2.1. "MODE" and "APPLICATOR" keys

- Pressing one of the 9 keys (S402 to 404, 406 to 408, 410 to 412) activates the assigned LED.
- When changing between inductive and capacitive applicators the switching noise of relay K301 must sound.

3.3.2.2. "+" and "-" keys, "MINUTES" indicator

- A short actuation of the "+" key (S405) increments the treatment time indicator "MINUTES" by 1 (end value 30).
- Continuous actuation of the "+" key increases the indicated time in steps of 5 digits (e. g. 5, 10, 15, etc. - end value 30).
- The actuation of the "-" key (S401) has the similar effect but the time indicated is reset (end value 0).
- Simultaneous actuation of both keys results in the indication of "0".

3.3.2.3. Power selector "INTENSITY", indicators "WATTS" and "TUNING"

- Separate the coaxial plug connection X222 and connect the generator output to the t 50-Ω precision resistor with power meter
- Check the indication of the power ranges:
  3 W to 30 W in 3-W steps,
  30 W to 80 W in 5-W steps,
  80 W to 200 W in 10-W steps
  as well as the power range limits in dependence on the mode of operation and the applicator selected in the following way.
- Select "CW" mode, "Triplode" applicator and treatment time (> 0);
- Turn the power selector (D408) by one click-stop detent to the right side;
- "A" must appear on the "MINUTES" indicator for Tuning;
- After switching over the indicator to treatment time the power of "9 W" must be displayed, and all LEDs of the bar indicator (VD401) are activated;
- Check the power ranges by additional incrementing the power selector to the right;
- Then set the power to "0" by turning the power selector to the left side;
- Repeat this procedure in the CW mode of operation for all applicators where the initial values after the tuning operation (9 W each) as well as the end values are to be checked:

coil-field electrode, small	30 W
coil-field electrode, medium	90 W
capacitor-field electrode, small	21 W
capacitor-field electrode, medium	80 W
capacitor-field electrode, large	200 Q.

- Subsequently check the limit values of the power ranges in the pulsed modes (initial values 3 W each), the end values are 30 W for all applicators except the capacitor-field electrode, small with 21 W.

3.3.2.4. Timer function

- Set the treatment time to "1".
- Turn the power selector one step to the right.
- Start the time measurement by switching over the treatment time indicator from "Ab" to "1".
- Terminate the time measurement after the start of the acoustic signal
  $t_{setpoint}$ = 60 s ± 1 s.
- Turn the power selector to the left - the acoustic signals terminate.

3.3.2.5. Emergency-off function

- Set the output power to any value > 0.
- Wait for the duration of tuning process.
- Actuate the emergency-off switch.
- A continuous acoustic signal must sound and “FEC” willappear at power display
- Relay K001 must be released.
- Push RESET key
- The acoustic signal terminates and the unit changes to the stand-by mode.
- Relay K001 must be active.

3.3.2.6. Reset key

- Adjust any treatment time value.
- Press Reset key (S409).
- After this, the unit must be in the stand-by mode.

3.4. Tuning

- Set the unit to the stand-by mode.
- Engage the coaxial plug connection X222.
- Connect the 50Ω with power meter to the unit output X003. (Thermal power sensor is connected to the 40dB output of 50Ω terminal resistor.
- Connect the digital multimeter between the X206 and X210 terminals.
- Adjust the operating voltage "+15 V" to 15.00 V ... 15.05 V by means of P1 (A100).
- Disconnect X207 an put X207 to ground and set X216 to zero by means of R205 (X212 must be 0V! otherwise put B of V210 to ground)
- Set the unit to be tested to the following values:
  "CW" mode of operation,
  "Triplode" applicator,
  Treatment time "30",
  Power "9".

- After the automatic tuning run adjust the output power to 9 W ± 0.3 W by means of R465.
- Set the power at the unit to be tested to "150".
- Adjust the output power to 150 W ± 2 W by means of R202.
- Set the power selector to "0".

3.5. Check of the operating voltages and currents

- Set the mains power supply to rated mains voltage (constant).
- The measurement of the mains current consumption is performed by means of the moving-iron instrument.
- With a load resistance of 50 Ω at X003, the operating voltages and currents are to be measured in the stand-by mode (1) and for the output power of 200 W according to the following table:

Test	Setpoint (1)	Setpoint (2)
Operating voltages between: (+) pole (-) pole	in V	in V
X403/2 - earth X002/5 - earth X002/6 - earth X205 - earth	+5 ± 0.15 +15 ± 0.05 -14.5 ± 0.5 +12 ± 2	+5 ± 0.15 +15 ± 0.22 -15 ± 0.22 +45 ± 2
Mains current consumption: at 230 Va.c./50 Hz at 115 Va.c./50 Hz	 max. about 0.5 A max. about 1.0 A	 max. about 3.0 A max. about 5.8 A

3.6. Check of generator frequency and pulse parameters

3.6.1. Generator frequency

- Connect the 50Ω terminal to output X003.
- Connect the frequency meter to the (-40)-dB measurement output
- Set the "Triplode" applicator, "CW" mode and treatment time.
- Adjust the power, wait for the tuning run.
- Determine the transmitter frequency ($f_{setpoint}$ = 27.11 MHz to 27.13 MHz).
- Turn the power selector to "0".
- By way of substitution and with the above adjustments, the generator frequency can be measured with a capacitor of 1 pF/400 V connected in series to socket X003 in the no-load operation.

3.6.2. Pulsed operation of "70 Hz"

- Connect the oscilloscope to the (-40)-dB measurement output
- Select the "70 Hz" pulsed mode and the treatment time.
- Select the output power and wait for the tuning run.
- Measure the pulse duration ($t_{p/setpoint}$ = 1.8 ms to 2.2 ms) and frequency ($f_{setpoint}$ = 65 Hz to 75 Hz) by means of the oscilloscope.
- Set the power selector to "0".

3.6.3. Pulsed operation of "350 Hz"

- Select the "350 Hz" pulsed mode and proceed according to clause 3.6.2.
- Measure the pulse duration ($t_{p/setpoint}$ = 350 µs to 450 µs) and frequency ($f_{setpoint}$ = 325 Hz to 375 Hz) by means of the oscilloscope.
- Set the power selector to "0".

3.7. Check of the power output

3.7.1. Unbalanced output X003

- Connect the power measurement system to X003.
- Set the "Triplode" applicator and treatment time.
- In the different modes of operation the following power values are to be checked, where at least 9 LEDs of the bar indicator must be lit after the tuning:

Mode of operation	**Min. power range** [W]	**Max. power range** [W]
CW mode	9 ± 0,5	200 ± 20
Pulsed mode 70 Hz	3 ± 1	30 ± 3
Pulsed mode 350 Hz	3 ± 1	30 ± 3

- Remove the power measurement system from the unit to be tested.

3.7.2. Balanced output X004/X005

- Connect the lamp phantom circuit to X004/X005.
- Set the "Capacitor-field electrode, large" applicator, CW mode and treatment time
- Start operation by turning right of power slector. After tuning run increase power and optimise electrode distance of phantom to 9 to 10 LED´s of tuning indicator.
- Set "200 W" by means of the power selector.
- Lamps have to light up bright

3.7.3. Auxiliary check of the power output

- Connect the corresponding applicator to the assigned output of the unit.
- A box-type plastic or glass container (5 l to 10 l) is to be filled with a 0.9-% salt solution.
- Position the applicator to the immediate vicinity of the container.
- After the tuning run, set the output power of the unit to "200" W and change the position of the applicator so that as much as possible LEDs (7 to 10) of the bar indicator are lit.

3.8. Check of the internal error recognition circuits

3.8.1. Temperature monitoring circuit

- Set any mode of operation, applicator, treatment time and power at the unit to be tested.
- Short-circuit C008 (RF sub-assembly) to earth.
- The error condition "FEb" has to be indicated at the "WATTS" indicator and "0" at the "MINUTES" one.
- Eliminate the short-circuit and actuate the Reset key.

3.8.2. Generator voltage

3.8.2.1. Exceeded voltage

- Switch off the unit, discharge C001.
- Short-circuit X204 to earth.
- Set the unit to the stand-by mode.
- The error condition "FE7" has to be indicated at the "WATTS" indicator.
- Switch off the unit.
- Eliminate the short-circuit.

3.8.2.2. Less voltage

-	Remove F003, measurement instrument between X205 and ground, switch on
-	If voltage lower than 6V error code “FE8” appear

3.9. Continuous operation

3.9.1. Preparation for continuous operation

- Close the RF sub-assembly.
- Mount the face and, in doing so, observe that the earthing conductor is correctly connected.
- Connect the compact lamp phantom LPH 200 to output X004/X005.
- The continuous operation is to be performed with a room temperature between 35 °C and 40 °C.
- Record (time, type and duration) and eliminate all failures of the unit.

3.9.2. Performance of the continuous operation

- This test is to be performed in at least four cycles of 30 min each in any pulsed and the CW mode of operation.
- Between the individual cycles the unit is to be separated from the mains for about 1 minute - install the unit, select the pulsed mode, "Capacitor-field, large" applicator and a treatment time of "30".
- The continuous operation starts with setting the maximum possible output power.
- After the termination of the treatment time separate the unit from the mains for about 1 min.
- Select the CW mode and the same settings as in the first cycle.
- After the termination of treatment time separate the unit from the mains for about 1 min.

3.10. Final test

- The final test is to be performed immediately after the continuous operation in the hot condition.

3.10.1. High-voltage test

- The test is to be performed in accordance with EN 60601-1 and En 60601-1-2
- Connect the unit to be tested to the high-voltage testing device.
- Switch on ("I") mains switch S001.
- Apply the test voltage of 1.5 kV, 50 Hz, to the contact positions of the testing device for 1 min.
- In way of substitution, the test can also be performed with the pins of the power cord plug short-circuited and by applying the test voltage between this short-circuit bridge and the earthing contact of the power cord plug.
- The applicators are tested with a voltage of 4 kV.
- Record the test result.

3.10.2. Measurement of the leakage current of the casing

- The test is to be performed in accordance with EN 60601-1 and EN 60601-1-2
- Connect the unit to be tested to the leakage-current measuring device.
- Switch on ("I") mains switch S001.
- Measure the leakage current of the casing at a rated voltage of 253 V. Record the maximum measurement value SFC, $I_{leak/max}$ = 0.5 mA.
- Perform the measurement of the earth leakage current SFC, max. value 1mA
- Record the measurement values.

3.10.3. Earthing conductor test

- The test is to be performed in accordance with EN 60601-1 and EN 60601-1-2
- Connect the unit to be tested to the earthing-conductor testing device.
- Measure the voltage drops between the earthing conductor of the mains connector of mains cord and all metal parts of the unit, that can be touched, under the following condition:
  I_{earth} = 25 A, $U_{earth/setpoint}$ < 5 V.
- Record the maximum measurement value.

3.10.4. Measurement of the insulation resistance

- The test is to be performed in accordance with EN 60601-1 andEN 60601-1-2
- Measure the resistances between mains network and casing by means of the insulation resistance measuring instrument (U_{testDC} => 500 V at 500 Ω,
  I_{testDC} <= 5 mA at 1 kΩ).
- The largest resistance measured shall not be less than 2 MΩ.
- Report the measurement value.

3.10.5. Measurement of the mains current consumption

- Measure the mains current consumption according to clause 3.5 and report the value.

3.10.6. Check of the power values

- Measure the power values according to clauses 3.7.1. and 3.7.2. and report the values.

3.10.7. Operation check

- Perform the operation check according to clause 3.3.

4. Repair instructions

4.1. Function check of the power generator A200

In case of trouble these instructions can be used for trouble shooting and for the determination of whether the power generator correctly operates or not. It shall be possible to localise the trouble up to the corresponding faulty sub-assembly.

ATTENTION: The setting components on the PCB (except R202 and R255) shall not be re-adjusted because special measuring instruments are required for the different setting values!

Measurement conditions: If not given elsewhere, all voltages given are to be measured against earth.

4.1.1. Check of the supply voltages

Check:

- +15 V (X206) and -15 V (X209) against earth.
- The secondary voltages of the mains transformer under no-load conditions, i. e. without any RF power output:
  about 45 V_{RMS} between X002.1 and X002.1
  about 26 V_{RMS} between X002.3 and X002.4.

4.1.2. Readiness for operation of the A200 sub-assembly

Separate the plug connection X207 and apply earth potential to the control-voltage input U_{in} (X207), i. e. RF power is not delivered.
Then measure the following voltages:

• Power supply

A voltage of about +13 V appears at X205. This voltage is superimposed by a serrated voltage of about 3 V and irregular period in the second range. At its pin 15 the integrated circuit N203 delivers an internally generated reference voltage of about -8.2 V measured against X205.

The controller is to be used to set the voltage at X205 for 250 W or 200 W RF output power across 50 Ω, respectively.

• Voltage of the level control

A voltage of about 0 V appears at the basis of V210, thus, the level control is blocked.

• Analogous computer

No voltage can be measured at the measurement points X214 to X218.

• Cable voltage monitoring

A voltage of about 14 V applies at the output of the operational amplifier N201/2, pin 7.

4.1.3. General information on the power loop

The power loop includes the following components:

4.1.3.1. Level control

The level control consists of: R242, V210, V211, L212, C223.

The range of the input voltage at the basis of V210 is about 0 to 12 V. With a voltage below approximately +2 V the level control delivers no output power. The level control is set to full amplification with a voltage of about 12 V to 14 V.

4.1.3.2. Amplification tract

This tract includes: R252, C235, L213, V212, C238, C239, L216, V213, L219, L220, C263, C264, L221, L222, L226, C273, C274, C275 to X219.

All stages operate in B-point mode without any zero-signal current. The following voltage values can be used as reference.

Voltage values to be determined by means of an oscilloscope:

The following list of levels is given for the elimination of errors, if required. It is valid for an output power of 250 W at 50 Ω (with the control voltage of +5 V at X207 and a DC voltage of +48 V at X205).

The values given are average ones.

- Voltage at the collector of V209 = 10 V_{pp} to 13 V_{pp} (V_{max} = 20 V, V_{min} = 7 V)
- Voltage at the basis of V211 = 4 V_{pp} to 5 V_{pp} (V_{max} = 2 V, V_{min} = -3 V)
- Voltage at the basis of V212 = 9 V_{pp} to 11 V_{pp} (V_{max} = 3 V, V_{min} = -7 V)
- Voltage at the collector of V212 = 17 V_{pp} to 20 V_{pp} (V_{max} = 23 V, V_{min} = 5 V)
- Voltage at the basis of V213 = 13 V_{pp} to 17 V_{pp} (V_{max} = 8 V, V_{min} = -6 V)
- Voltage at the collector of V213 = 100 V_{pp} to 115 V_{pp} (V_{max} = 115 V, V_{min} = 0 V)

Typical measurement values of the correctly operating final stage:

DC operating voltage	U_b = +48 V at X205,
DC current consumption	I_b = 8.2 A to 8.7 A at X205,
Peak collector voltage	U_s = 110 V max.,
RMS value of the collector voltage	U_{RMS} = 35 V.

4.1.3.3. Power and mismatching meter LFM

It includes: C201 to C205, L224, L225, R201 to R211, V203 and V204.

ATTENTION: Do not manipulate C202 and R201. R201 shall not be set to 0 Ω. An adjustment is only possible with an load resistor of accurately 50 Ω at X222 and a RF output power of about 200 W. Only under these conditions a mutual adjustment of C202 and R201 is possible for a minimum voltage at X218!

The reference voltages of the rectifiers V203 and V204 can be measured at eyelets X217 and X218. Their range of values is between 0 and -5 V. The voltage at X217 is always more negative than that at X218 or equal in the limit case.

The allocation is as follows:

- Correct matching at X222 (50 Ω)
  U at X218: < -10 mV at P = 0 to 250 W
  U at X217: 0 to -5 V according to the output power
- Medium mismatching at X222 (normally tuned condition)
  U at X218: 0 to -5 V according to the output power
  U at X217: 0 to -5 V according to the output power
  The voltage at X217 is always more negative than that at X218.
- Extreme mismatching at X222 (separated cable connection, etc.)
  U at X218: 0 to -5 V according to the output power
  U at X217: 0 to -5 V according to the output power
  Both voltages are equal in value!
  With 100 W output power about -3.5 V are applying at X217.

4.1.3.4. Adding amplifier

It includes: R213, R216, N201/4, R257 up to the plug connector X212.
The sum of the voltages measured at X217 and X218 can be determined at X212, however, the sign is changed and multiplied by 0,82.

4.1.3.5. Subtracting amplifier

It includes: R212, R215, R214, N201/3, R256 up to the plug connector X211.
The difference of the voltages measured at X217 and X218 can be determined at X212, however, the sign is changed and multiplied by 0,82.

4.1.3.6. Multiplier (N202)

The variable resistors R203 to R205 shall not be re-adjusted. They are provided for offset tuning of the integrated circuit. At the output of the multiplier X216 a voltage U_p must apply that can be determined as follows:

$$U_p = U_{in}/2 = k * U_{x215} * U_{x214} /10$$

There shall be no voltage drop at the resistors R222 and R223. When after any integrated circuit replacement a new offset tuning is necessary perform as follows:

- 0 V at U_{in}
- Connect X214 and X215 to earth ⇒ set R205 to 0 V at X216.
- Apply +5 V at X215, connect X214 to earth ⇒ set R204 to 0 V at X216.
- Apply +5 V at X214, connect X215 to earth ⇒ set R203 to 0 V at X216.
- Repeat the adjustment one times more. A 4.5-V battery can also be used instead of the +5 V.

4.1.3.7. Setpoint/actual value comparator

It includes: R221, R225, R226, C210, V214, N201/1.

A voltage, that is exactly proportional to the active output power delivered, applies at X216 where 2.5 V correspond to an output power of 250 W. By means of an suitable power meter the adjustment is possible by R202.

In any case only one of the operational amplifiers N201/1 or N201/2 controls the voltage level. The output at which the lowest voltage applies, pin 1 or pin 7, controls the level. In the case pin 1 controls, that means at pin 7 there applies about +14 V, only half of the voltage applying at X207 can be measured at X208.

With a good matching to X222 normally voltages of about +3 V to +9 V can be measured at pin 1 of N201/1 but the value depends on the RF power.

4.1.3.8. Cable voltage monitoring circuit

This circuit includes N201/2 and the externally connected components of which.

The sum voltage at X212 is a measure of the maximum RF voltage along the cable at X222. Integrated circuit N201/2 monitors this voltage. In the standard case, i. e. the load is matched to X222 and power requirement below 250 W, about +14 V apply at the output pin 7.

The cable voltage monitoring is active when extreme mismatching occurs at X222 and high RF power is required at the same time.

For checking, R219 can be bridged for a short time. This results in blocking the level control and, thus, the RF power becomes zero. Reference at pin 5 of V202 is set by means of R228 so that output level max. ≦ 260W

4.1.3.9. Analogous OR interconnection

It includes: V201, V202, R229.

Via R229 a current is fed into the basis of V210 trying to increase the level. When the RF voltage level is sufficient one of the control systems becomes active and takes over a component current through V201 or V202. In this way, the output power is stabilised. V201 and V202 are used to decouple the outputs of the operational amplifier.

4.1.4. Operation of the power supply

The power supply delivers the voltage at X205 which depends on the AC collector voltage of the final stage transistor. this is obtained by feeding a current at pin 10 of N203 through V215/V216, R258. In case of matching the following relations apply:

Output power [W]	**Voltage at X205** [V]
0	about 13
50	about 29
100	about 36
150	about 41
200	about 44
250	about 48

Be careful when working at the power supply. With full output power a direct short-circuit between X205 and earth can damage the integrated circuit N203!

4.1.5. Oscillator

The oscillator operates at a voltage of 6.2 V measured across C219. The basis voltage of V208 is about 3.6 V. The RF wave should not be measured at V208 because the oscillations can be interrupted in case of loading; that's why, it is measured at V209. By means of L210 the voltage is tuned to the maximum of about 10 V_{pp} to 13 V_{pp} measured at the collector of V210. The core of L210 shall not be displaced without checking the oscillations by a RF oscilloscope because the oscillator operates only in a small tuning range of the core.

4.1.6. Driver

A voltage of 3.8 V measured across C233 ensures a sufficient zero-signal current of V209.

4.1.7. RF circuits at the final stage output

Special RF measuring instruments are required for matching the output circuits.

When the coils L226 or L227 are bent the resistors R250 and R251 can burn off. An auxiliary matching is possible by temporarily clamping two LEDs each, which are connected in anti-parallel to each other, in parallel to R250 and to R251. With small output powers these LEDscan be taken to the extinguished mode by slightly bending the coils L226 and L227. The coil 223 can only be adjusted by means of a spectrum analyser or wobbler. By slight bending it is adjusted to serial resonance with C265/C266 at 54.24 MHz. In case of after-sales service work the coils L219 to L222 can only be checked for their geometry.

	L219	L220	L221 = L222
- Inner diameter [mm]	10	10	10
- Mounting height on the PCB [mm]	22	22	22
- Distance between turns [mm]	2..5		
- Length of the coil [mm]		7..8,5	8.5

4.1.8. Typical measurement values with a matched load (50 Ω)

U_{in} (X207)	= +2.0 V	The output power is 100 W
U at X216	= +1.0 V	
U at X217	= -3.5 V	
U at X218	= -0.2 V	
U at N201/C, pin 8	= +2,7 V	
U at N201/D, pin 14	= +3V	
U at N201/A, pin 1	= +3.5 V	
U at N201/B, pin 7	= +14.3 V	
U at the basis of V210	= 3.1 V	

4.2. Repair instructions for the control computer (A400) V6.0; V6.1

4.2.1. Indication of the error conditions

The control computer sub-assembly performs a series of internal monitoring operations which, in case of an error, release the following error messages

Indication	Cause of error
FE0	Operation error; the power selector has been actuated without any setting of operation parameters in advance.
FE1	At the time of putting the unit into operation a key (S401 to S408, S410 to S412) is short-circuited. The encoded key designation appears an the "MINUTES" indicator; there is the following allocation: 1 - S401 ("-") ; 7 - S406 (Triplode) 2 - S408 (small coil field appl.) ; 8 - S411 (medium cap.-field appl.) 3 - S402 (350-Hz pulsed mode) ; 9 - S404 (CW operation) 4 - S407 (medium coil-field appl.) ; A - S405 ("+") 5 - S410 (large cap.-field appl.) ; b - S412 (small cap.-field appl.) 6 - S403 (70-Hz pulsed mode).
FE2	An output power is measured though the power selector is on "zero".
FE3	The power measured after the matching operation (indication "Ab") exceeds the permissible limit value.
FE4	In pulsed operation an inadmissible high power has been measured during the pulse interval.
FE5	The voltage applying at C402 cannot be adjusted to the setpoint (operating voltages of ± 15 V are not correct, network N401A or pulse generator D408 is defective).
FE6	With any power selection the output power measured is "zero".
FE7	The supply voltage at X002.3 is inadmissible high; the triggering of thyristor V001 is disturbed (cf. clause 5.).
FE8	The power of the lowest range cannot be adjusted in the corresponding mode.
FE9	The thermistor circuit (R003) is interrupted.

FEb	Thermal overloading of the power generator or short-circuit of R003, respectively. In the first case, wait only for cooling down in the stand-by mode, in the second one the unit is defective; this defect can be recognized by the indication "0" at the treatment time indicator.
FEC	Shows a Reset actuation by integrated circuit D401. An error message can only be indicated within the framework of the operation of microprocessor D402.

4.2.2. Description of the control computer signals

The following typical voltages can be measured to earth:

D401.11 (WDI)	5-V CMOS pulses (low-active), duration about 0.8 ms, period 4.0 ms to 4.8 ms.	
D401.14 (WDO)	TTL, high	
D401.15 (RES)	TTL, high	
D401.1 (VCC)	5 V (V_{pp} at pin 68)	
D402.65 (CLKOUT)	5-V CMOS, balanced clock of about 4 MHz.	
D402.39 8P2.5/PWM)	5-V CMOS pulses (high-active), period about 122 µs, pulse duration about 20 µs in the stand-by mode, pulse duration about 92 µs in 30-W pulsed mode, pulse duration about 90 µs in 200-W CW mode.	
C402	DC voltage between 0.5 V and 4 V depending on the duty factor at D402.39, superimposed by a serrated voltage (U_{pp} < 50 mV).	
D402.45 (P4.7/AD15)	5-V CMOS	
	Stand-by mode	- high level
	"70-Hz" pulsed mode, 30 W	- pulses (low-active), duration about 2 ms, period about 14 ms;
	"350-W" pulsed mode, 30 W	- pulses (low-active), duration about 410 µs, period about 2.8 ms;
	CW mode, 200 W	- low level.
N401B.9	Stand-by mode	- about -0.5 V
	"70-Hz" pulsed mode, 30 W	- pulses (high-active), duration about 2 ms, period about 14 ms; high level about 4.2 V low level about -0.5 V
	"350-Hz" pulsed mode, 30 W	- pulses (high-active), duration about 410 µs, period about 2.8 ms; high level about 4.2 V low level about -0.5 V
	CW mode, 200 W	- about 4.0 V.

D408.2/D408.4	When the pulse transmitter is not actuated both terminals are on TTL-low level. During the turning both terminals deliver time-delayed high-level pulses the phase of which is given by the direction of rotation.
D402.11 (P0.4)	About 0.8 V in stand-by mode; about 2.9 V at an output power of 200 W (50 Ω at X003), cf. clause 5.
D402.4 (P0.3)	About 2.5 V at a temperature of the heat sink (A200) of 25 °C, the voltage decreases with increasing temperature.
R445	5 V, in case of emergency-off switch actuation 0.6 V.
R444	1.2 V, in case of emergency-off switch actuation 5 V.
T407/emitter	0 V, in case of emergency-off switch actuation -15 V, relay K001 must switch over.

The other signals of the analogous inputs (port 0) of D402 are given in the Overall Circuit Diagram. At the pins of ports 1 to 4, which are not described, there apply signals the parameter of which are changed during the program running time; in general they are pulse-shaped.

4.3. Power supply (A100)

At the A100 sub-assembly only the output voltages are checked in the stand-by and power modes. In case of a negative result check and, if required, replace the mains fuse element of this sub-assembly. If this does not eliminate the trouble replace the sub-assembly.

WARNING: There are several accessible components on mains potential!

ATTENTION: The earthing conductor is screwed on and, thus, the contact is not necessarily ensured!

4.4. Output circuit (A300)

With this sub-assembly, take particular care for correct soldered connections and tightened screw-connections, otherwise, due to the heavy RF currents partial thermal overloading can occur. In addition, the safe operation of the K301 relay is to be observed. The contact/brake to separate the coarse/fine drive of tuning capacitor is to adjust so that the middle block of capacitor stop if fine tuning is swinging.

4.5. Harmonic filter (A500)

Take particular care for correct soldered connections. In case of voltage arc-overs or burning replace the sub-assembly by an intact, adjusted one. In any case, do not replace components of this sub-assembly because this would negatively affect the adjustment which can only be performed by the manufacturer.

5. Changes of wiring conditions and components

5.1 1. modification/supplement state of 01.01.93

For units produced in the time between 1. 1. 92 and 31. 12. 92 it is to be observed that units have the following features. In addition some changes were made due to the technical progress.

Unit sub-assembly A000:

- The lead-through filters C002 and C003 consist of a parallel connection of two filters each of the type FC (Y)-5, 1-250.
- The type of the fan motor is MDC 0825-012; in case of repair it can be replaced by the type given in the Spare Parts List.
- The cable connection X401.8 - X002.3 given in the Overall Circuit Diagram does not exist in the units of software version V6.0, V6.1
  This connection is provided for the purpose of monitoring the supply voltage of the power generator at X205. It is available in units from the Version V6.2 onwards. With units of version 6.0/6.1 this connection shall not be realized. When changing a unit from the V6.1 to a higher version the prepared cable must be connected.

Sub-assembly A300:

- This sub-assembly is accommodated on two PCBs.
- Resistor R307 is mounted outside the RF part between the lead-through filters C014 and C015. When the sub-assembly A300 is replaced, take care whether R307 is on the PCB to be inserted or not; if available, the external resistor is to be removed.
- There are additional components (K301, L306 to L309, R303 to F306, V303, C309 and C310) on the PCB. When one of these components failed the complete sub-assembly has to be replaced by a new one corresponding to the actual wiring and component condition. Take care that socket X003 shall have the guard against contacting in the form of a pressed-in insulating component.

Sub-assembly A400:

- The first dimensioning of the voltage divider R465/R466 was 10 kΩ/1.2 MΩ. This can be changed to R465 = 220 Ω and R466 = 10 kΩ.
- C425 is accommodated on the PCB directly at the base of the D402 integrated circuit.
- In case of repair, sub-assemblies of the V6.0 version can be replaced by those of the V6.1 one.

Sub-assembly A500:

- With the units of the above-mentioned production time a metal foil is soldered at the PCB of the harmonic filter as additional earthing contact. When replacing this board re-solder the foil at the new PCB.

5.2 2.modification/supplement, state of March 1995

-	EMI-filter SCI-3543-000 is used for C002/C003
-	Error code “FE7” is cancelled for V6.0/V6.1
-	For June/1994 a new layout exist of controller board. The board is compatibile in function and connection.

5.3. 3. modification/supplement, state of May 1996

With softwareversion V6.2 the tuning capacitor was modificated. A reconstruction is possible from V6.0/6.1 to V6.2.

The error code table was changed in 4.2.1.

Error code table of version V6.2:

Indication	Cause of error
FE2	P_{spec} = 0 P_{act}> 0 ; control input U_{in} or measuring input U_p is open
FE3	P_{act} > P_{spec} + 5W (control function is disturbet, generator is oscillating)
FE4	Pulse function is disturbed; in the pulse break the power is to big
FE6	P_{act}(measured) < P_{spec}; no signal at U_p; excessve load fluctuations
FE7	Exessive operating voltage of the power stage (> 50V at X002/3); V001 or the assigned control circuit is defective
FE8	Operating voltage of power stage is too low (< 6V at x002/3); V001 or assigned control circuit is defect; F003 is defective
FE9	Intrruption of the Thermistor circuit R003; (temperature monitoring)
FEA	Signal U_s + U_D is missing; line is interrupted; 15V is missing
FEb	Generator overheated (fan failure)
FEC	Emergency switch was actuatet; Interuption of emergency circuit S002

FE	Power actuator was actuated without enterig all operating parameters (mode, type of electrodes, treatment time)

To enable the interruption of the output power in case of an error, the emitter of T409 of A400 subassemly is not directly connected to V_{cc} anymore but now with the output Q8 (pin 19) of D6. With any error message the relay K001 is switched off via the T409/T407 path and power supply (+15V) of the power stage of the RF amplifier is interrupted.

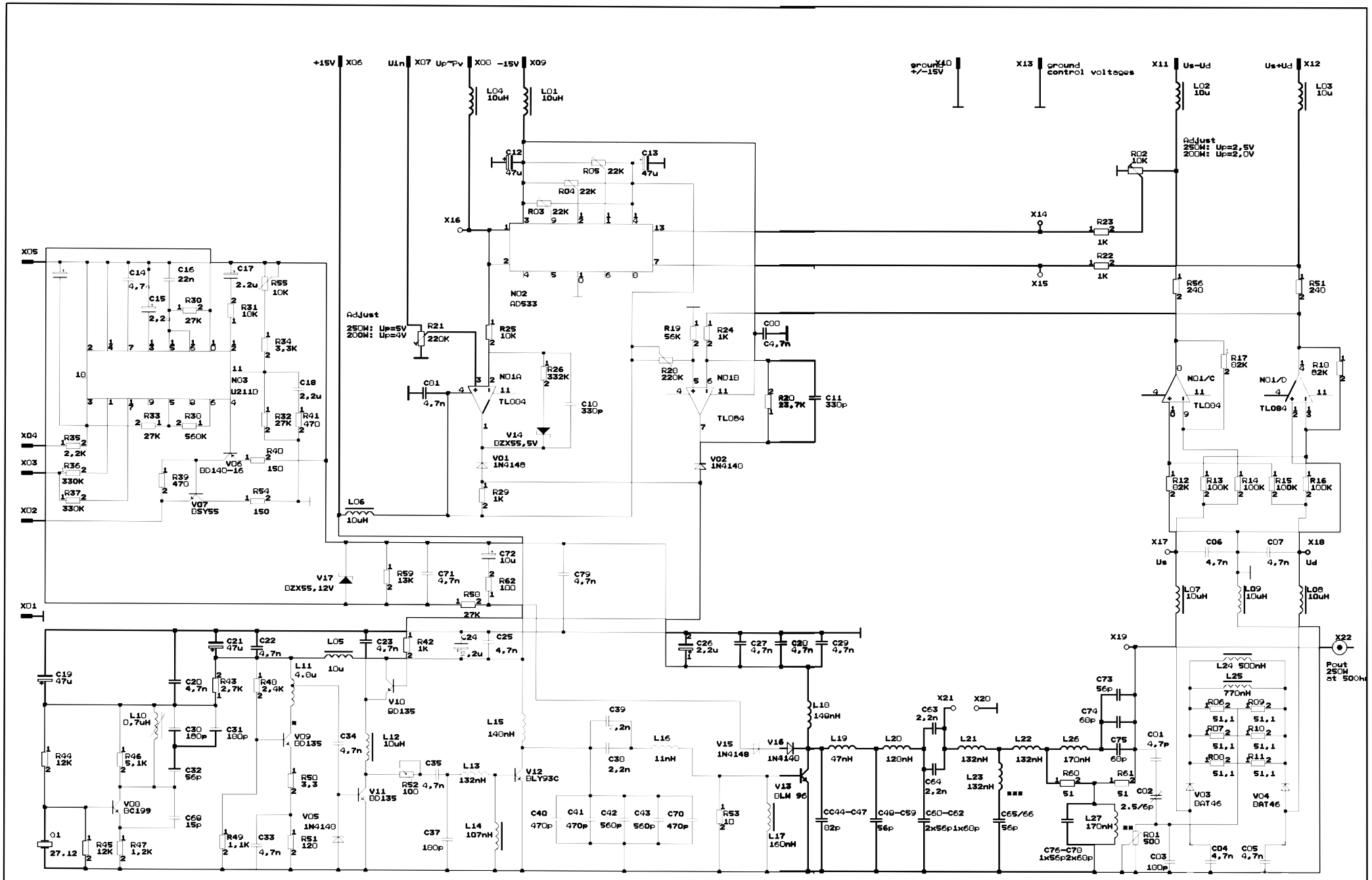

X04-X05:operating voltage of NO3

X03-X05:Synchron voltage of NO3

X02 :control of Thyristor

*:Umin 10Vpp

***:Adjust 54,24Mhz

**:Adjust Ud an X19 <100mV

if 250W at 500hm and s<1,05

UNIPHY Elektromedizin		
Title	RF generator 250W	
Size C	Document Number	REV 3
Date: July 24, 2001	Sheet of	

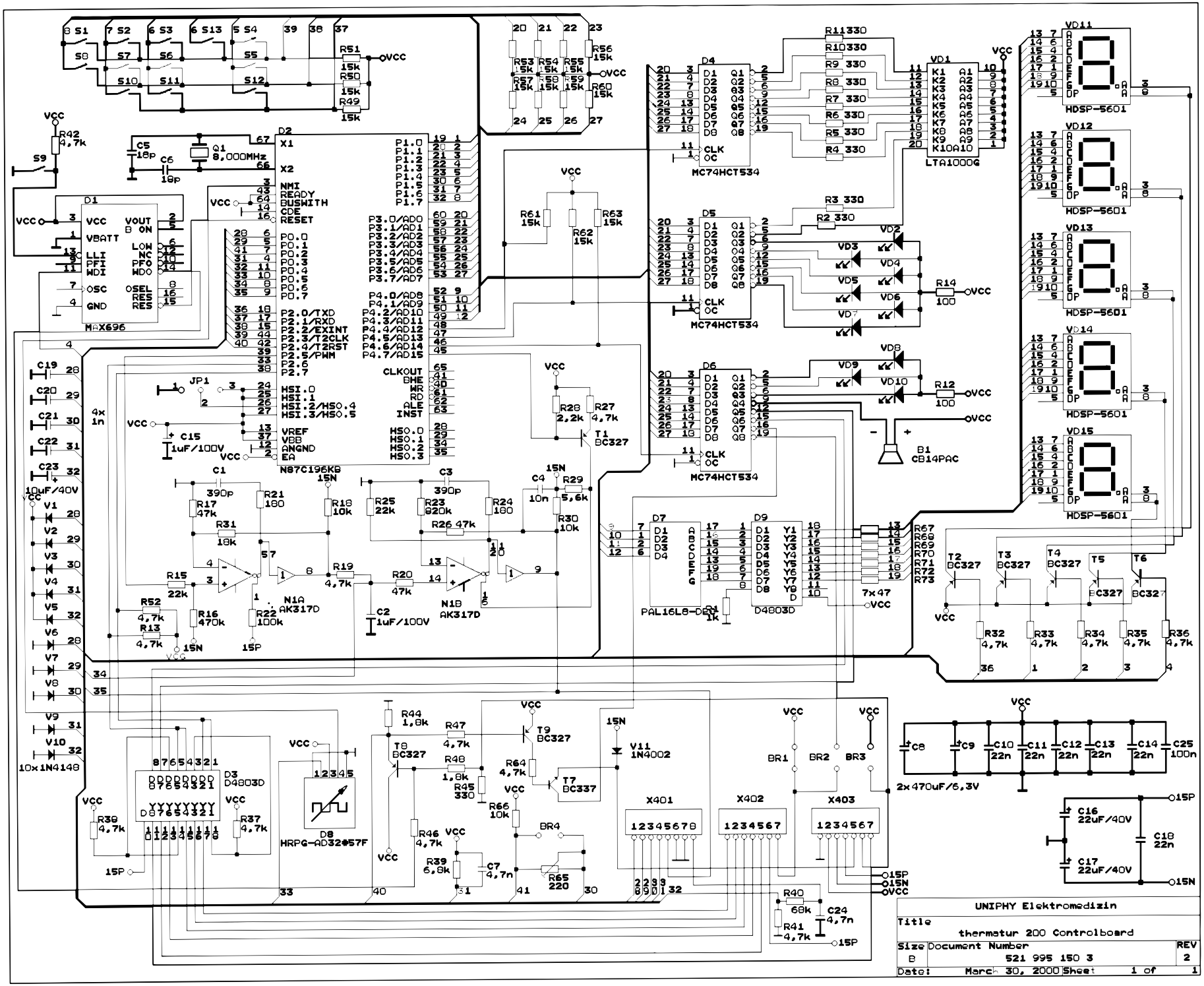
UNIPHY Elektromedizin
Title
thermatur 200 Controlboard
Size
B
Document Number
521 995 150 3
REV
2
Date:
March 30, 2000
Sheet
1 of 1
D2
N87C196KB
D1
MAX696
Q1
8,000MHz
D4
MC74HCT534
D5
MC74HCT534
D6
MC74HCT534
D7
PAL16L8-DEL
D9
D4803D
D3
D4803D
D8
HRPG-AD32#57F
VD1
LTA1000G
VD11
HDSP-5601
VD12
HDSP-5601
VD13
HDSP-5601
VD14
HDSP-5601
VD15
HDSP-5601
B1
CB14PAC
N1A
AK317D
N1B
AK317D
T1
BC327
T2
BC327
T3
BC327
T4
BC327
T5
BC327
T6
BC327
T7
BC337
T8
BC327
T9
BC327
V11
1N4002
10x1N4148
2x470uF/6,3V
X401
X402
X403
VCC
15P
15N

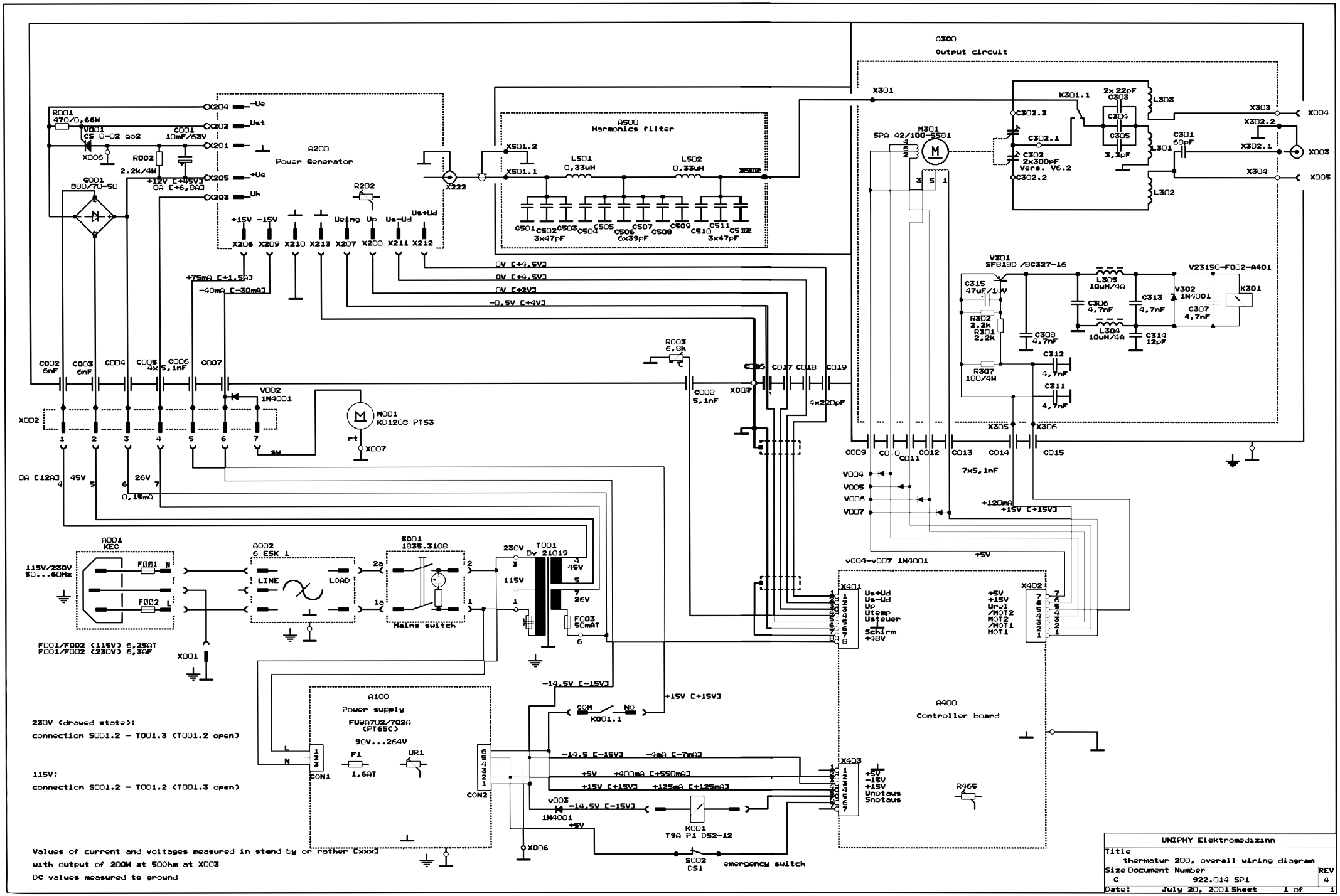
A300
Output circuit
A200
Power Generator
A500
Harmonics filter
A400
Controller board
A100
Power supply
FUPA702/702A
(PT65C)
90V...264V
A001
KEC
A002
6 ESK 1
S001
1835.3100
Mains switch
T001
Bv 21019
M001
KD1208 PTS3
M301
SPA 42/100-5501
V301
SF818D /BC327-16
V23150-F002-A401
K301
K001
T9A P1 DS2-12
S002
DS1
emergency switch
K001.1
115V/230V
50...60Hz
F001/F002 (115V) 6,25AT
F001/F002 (230V) 6,3AF
230V (drawed state):
connection S001.2 - T001.3 (T001.2 open)
115V:
connection S001.2 - T001.3 (T001.2 open)
Values of current and voltages measured in stand by or rather [xxx]
with output of 200W at 50ohm at X003
DC values measured to ground
UNIPHY Elektromedizinn
Title
thermstur 200, overall wiring diagram
Size Document Number REV
C 922.014 SP1 4
Date: July 20, 2001 Sheet 1 of 1